Electronic Audible Signal Devices / Electronic Buzzers Installation 107

Electr. Buzzer EM Pulse tone 230VAC BK

Part No.: **107.010.68**

MECHANICAL DATA	
Height	61 mm
Diameter	28 mm
Materials	PA-GF
Housing colour	Black
Protection category	IP65
Connection	Screw terminals
cross-sectional area maximum	1,50mm² / 16AWG
Type of fixing	Built-in mounting
Service life optical	5,000 h minimum
Acoustic service life	5,000 h minimum
Working temperature minimum	-20°C
Working temperature maximum	+50°C
UL Type Rating	Type 4X
Weight with packaging	33 g
Product weight	21 g

ELECTRICAL DATA	
Operating voltage	230V
Operating voltage type	AC
Operating voltage type	50Hz
Operating voltage tolerance	+/- 10%
Rated operational voltage	230 VAC
Rated operational current	8 mA
Rated inrush current	500 mA
Protection class	Protection class 2
Pollution degree	3 In the connection area: 2
Overvoltage category	II
Isolation voltage	Ui = 250V; Uimp = 2.500V

ACUSTICAL DATA	
Volume/dB(max) at 1m distance	80,0 dB dB(A)
Acoustic signal image	Pulse tone
Audio frequency	2400 Hz

! For additional installation and mounting information, refer to the appropriate user guide at www.werma.com. This printed copy is for information only and is subject to alteration.

Electronic Audible Signal Devices / Electronic Buzzers Installation 107

Electr. Buzzer EM Pulse tone 230VAC BK

DRAWING

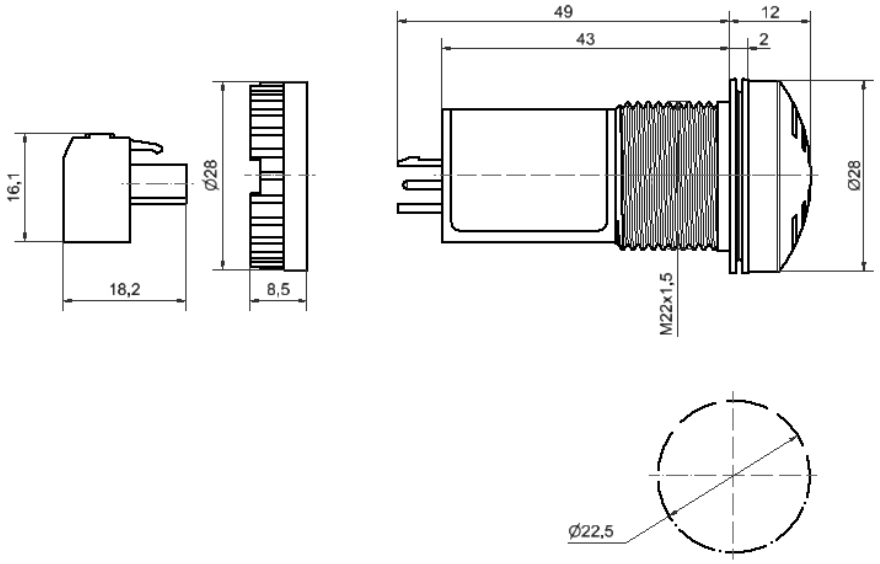

! For additional installation and mounting information, refer to the appropriate user guide at www.werma.com. This printed copy is for information only and is subject to alteration.